Inverted Type
Graphite Rupture Disks

Features

- The best choice for higher burst ratings
- Available in nominal sizes 1/2” (15mm) thru 24” (600mm) diameters
- Fail-Safe Design: If the disk is damaged or installed upside-down, it is designed to burst at or below the marked burst rating
- Designed to fit industry standard flanges ASME B16.5, ISO and JIS
- Burst ratings 0.25 psig (0.02 barg) to 1,000 psig (68.95 barg) or higher
- 0% manufacturing range
- Flat surface of the disk contacts the process media
- Operating pressures to 90% of the disk’s marked burst pressure. Contact ZOOK for operating ratio for burst pressures below 40 psig (2.76 barg)
- Temperature ratings –290°F to +700°F (–179°C to +371°C) Maximum temperature rating without insulation is 430°F (221°C) or 700°F (371°C) with insulation. Contact ZOOK for higher temperature ratings. The specified temperature shall be at the disk location at the time when the disk is expected to rupture
- All flange group 2 disks are armored
- Many standard Inverted disks in common sizes and pressure ratings are available for RAPID Delivery. Contact ZOOK for more information
  - Sizes in (mm) : 3”(80), 4”(100), 6”(150), 8”(200) to fit ASME B16.5 Class 150 flanges
  - Burst Pressures psig (barg): 125 (8.62) and 150 (10.34)
  - **Note**: RAPID Delivery Inverted disks are supplied with adhesive tags
- ASME (UD) and PED (CE) compliance available

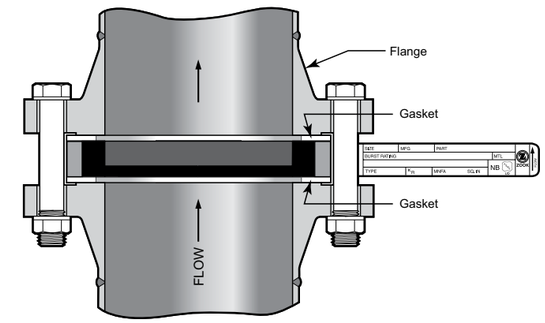

Certified Flow Resistance Factor (Krgl)

Krgl	0.64

Specifications

Disk Size					MNFA				Thickness*								Outside Diameter																								Burst Ratings					
									(Flange Group 1)				(Flange Group 2)				ASME B16.5 Class						DIN & ISO										ISO ONLY				JIS								Min Pressure (All Flanges)		Max Pressure (Flange Group 1)		Max Pressure (Flange Group 2)	
NPS		DN		Actual ID	Full Bore		w/ External Vacuum Support		ASME Cl 150 PN6 / 10 / 16 / 20 JIS 5K / 10K / 16K				ASME Cl 300 / 600 PN25 / 40 / 50 JIS 20K / 30K				150		300		600		PN6		PN10		PN16		PN25		PN40		PN20		PN50		5K		10K		16K		20K		30K							
									Standard Disk		Insulated Unit		Standard Disk		Insulated Unit																																			
in	mm	mm	in	mm	in²	mm²	in²	mm²	in	mm	in	mm	in	mm	in	mm	in	mm	in	mm	in	mm	in	mm	in	mm	in	mm	in	mm	in	mm	in	mm	in	mm	in	mm	in	mm	in	mm	in	mm	in	mm	psig	barg	psig	barg	psig	barg
½	13	15	0.62	15.7	0.30	193	-	-	0.63	16.0	1.75	44.4	0.625	15.8	1.75	44.4	1.75	44.4	2.00	50.8	2.00	50.8	1.73	43.9	2.01	51.0	2.01	51.0	2.01	51.0	2.01	51.0	1.75	44.4	2.00	50.8	1.89	48.0	2.17	55.1	2.17	55.1	2.17	55.1	2.40	60.9	25.00	1.72	▲	▲	▲	▲
¾	19	20	0.82	20.8	0.53	341	-	-	0.63	16.0	1.75	44.4	0.625	15.8	1.75	44.4	2.13	54.1	2.50	63.5	2.50	63.5	2.13	54.1	2.40	60.9	2.40	60.9	2.40	60.9	2.40	60.9	2.13	54.1	2.50	63.5	2.09	53.0	2.36	59.9	2.36	59.9	2.36	59.9	2.60	66.0	25.00	1.72	▲	▲	▲	▲
1	25	25	1	25.4	0.78	503	0.34	219	0.88	22.3	2.25	57.1	1.000	25.4	2.50	63.5	2.50	63.5	2.75	69.8	2.75	69.8	2.52	64.0	2.80	71.1	2.80	71.1	2.80	71.1	2.80	71.1	2.50	63.5	2.75	69.8	2.48	62.9	2.80	71.1	2.80	71.1	2.80	71.1	2.99	75.9	10.00	0.69	▲	▲	▲	▲
1-½	38	40	1.50	38.1	1.76	1,135	0.76	490	0.88	22.3	2.25	57.1	1.000	25.4	2.50	63.5	3.25	82.5	3.63	92.2	3.63	92.2	3.39	86.1	3.62	91.9	3.62	91.9	3.62	91.9	3.62	91.9	3.25	82.5	3.63	92.2	3.15	80.0	3.39	86.1	3.39	86.1	3.39	86.1	3.82	97.0	7.00	0.48	▲	▲	▲	▲
2	50	50	2	50.8	3.14	2,025	1.36	877	0.88	22.3	2.25	57.1	1.000	25.4	2.50	63.5	4.00	101.6	4.25	107.9	4.25	107.9	3.78	96.0	4.21	106.9	4.21	106.9	4.21	106.9	4.21	106.9	4.00	101.6	4.25	107.9	3.54	89.9	3.98	101.0	3.98	101.0	3.98	101.0	4.37	111.0	3.00	0.21	▲	▲	500.00	34.47
2-½	64	65	2.50	63.5	4.78	3,083	2.58	1,664	0.88	22.3	2.25	57.1	1.000	25.4	2.50	63.5	4.75	120.6	5.00	127.0	5.00	127.0	4.59	116.5	5.00	127.0	5.00	127.0	5.00	127.0	5.00	127.0	4.75	120.6	5.00	127.0	4.52	114.8	4.76	120.9	4.76	120.9	4.76	120.9	5.39	136.9	3.00	0.21	▲	▲	500.00	34.47
3	76	80	3	76.2	7.06	4,554	3.87	2,496	0.88	22.3	2.25	57.1	1.250	31.7	3.00	76.2	5.25	133.3	5.75	146.0	5.75	146.0	5.20	132.0	5.59	141.9	5.59	141.9	5.59	141.9	5.59	141.9	5.25	133.3	5.75	146.0	4.96	125.9	5.16	131.0	5.39	136.9	5.39	136.9	5.79	147.0	2.00	0.14	▲	▲	500.00	34.47
4	102	100	4	101.6	12.56	8,103	5.77	3,722	0.88	22.3	2.25	57.1	1.250	31.7	3.00	76.2	6.75	171.4	7.00	177.8	-	-	5.98	151.8	6.38	162.0	6.38	162.0	6.61	167.8	6.61	167.8	6.75	171.4	7.00	177.8	5.75	146.0	6.14	155.9	6.38	162.0	6.38	162.0	6.69	169.9	1.50	0.10	250.00	17.24	500.00	34.47
5	127	125	5	127.0	19.63	12,664	8.39	5,412	0.88	22.3	2.25	57.1	■	■	-	-	7.75	196.8	8.28	210.3	-	-	7.16	181.8	7.55	191.7	7.55	191.7	7.64	194.0	7.64	194.0	7.75	196.8	8.38	212.8	7.12	180.8	7.36	186.9	7.87	199.9	7.87	199.9	8.07	204.9	1.50	0.10	170.00	11.72	450.00	31.03
6	152	150	6	152.4	28.27	18,238	14.78	9,535	0.88	22.3	2.25	57.1	1.750	44.4	4.00	101.6	8.63	219.2	9.75	247.6	-	-	8.15	207.0	8.58	217.9	8.58	217.9	8.82	224.0	8.82	224.0	8.63	219.2	9.75	247.6	8.31	211.0	8.54	216.9	9.25	234.9	9.25	234.9	9.76	247.9	1.00	0.07	170.00	11.72	450.00	31.03
8	203	200	8	203.2	50.02	32,270	25.81	16,651	1.13	28.7	2.75	69.8	2.250	57.1	5.00	127.0	10.88	276.3	12.00	304.8	-	-	10.31	261.8	10.75	273.0	10.75	273.0	11.18	283.9	11.42	290.0	10.88	276.3	12.00	304.8	10.12	257.0	10.51	266.9	11.20	284.4	11.20	284.4	11.54	293.1	0.50	0.03	170.00	11.72	450.00	31.03
10	254	250	10	254.0	78.53	50,664	32.70	21,096	1.50	38.1	3.38	85.8	-	-	-	-	13.25	336.5	-	-	-	-	12.48	316.9	12.91	327.9	12.95	328.9	-	-	-	-	-	-	-	-	12.68	322.0	12.99	329.9	-	-	-	-	-	-	0.25	0.02	150.00	10.34	-	-
12	305	300	12	304.8	113.09	72,961	47.24	30,477	2.00	50.8	4.38	111.2	-	-	-	-	16.00	406.4	-	-	-	-	14.69	373.1	14.88	377.9	15.12	384.0	-	-	-	-	-	-	-	-	14.45	367.0	14.76	374.9	-	-	-	-	-	-	0.25	0.02	150.00	10.34	-	-
14	356	350	13.25	336.5	137.88	88,954	-	-	2.25	57.1	4.88	123.9	-	-	-	-	17.63	447.8	-	-	-	-	16.65	422.9	17.24	437.9	17.48	443.9	-	-	-	-	-	-	-	-	16.14	409.9	16.54	420.1	-	-	-	-	-	-	0.25	0.02	150.00	10.34	-	-
16	406	400	15.25	387.3	182.65	117,838	-	-	2.50	63.5	5.38	136.6	-	-	-	-	20.13	511.3	-	-	-	-	18.62	472.9	19.25	488.9	19.49	495.0	-	-	-	-	-	-	-	-	18.50	469.9	19.02	483.1	-	-	-	-	-	-	0.25	0.02	150.00	10.34	-	-
18	457	450	17.25	438.1	233.70	150,773	-	-	2.75	69.8	5.88	149.3	-	-	-	-	21.50	546.1	-	-	-	-	20.79	528.0	21.22	538.9	21.85	554.9	-	-	-	-	-	-	-	-	20.87	530.1	21.81	553.9	-	-	-	-	-	-	0.25	0.02	■	■	-	-
20	508	500	19.25	488.9	291.03	187,760	-	-	3.00	76.2	6.38	162.0	-	-	-	-	23.75	603.2	-	-	-	-	22.76	578.1	23.39	594.1	24.29	616.9	-	-	-	-	-	-	-	-	22.83	579.8	23.35	593.0	-	-	-	-	-	-	0.25	0.02	■	■	-	-
24	610	600	23.25	590.5	424.55	273,902	-	-	3.00	76.2	6.38	162.0	-	-	-	-	28.13	714.5	-	-	-	-	26.73	678.9	27.36	694.9	28.90	734.0	-	-	-	-	-	-	-	-	27.09	688.0	27.44	696.9	-	-	-	-	-	-	0.25	0.02	■	■	-	-

Notes:
*Standard disk thickness does not include gaskets. Insulated unit thickness includes all gaskets
▲ Max pressure based on max design Pressure/Temperature of companion flanging selected
■ Contact ZOOK
- Disks w/pressure ratings of 25 psig (1.72 barg) and above will support full vacuum w/o additional support
- Contact ZOOK Engineering for applications with less than full vacuum or Bak-Pressure
- Maximum pressure rating of ASME B16.5 Class 150 flanges is 290 psig (19.99 barg) @ 100°F (38°C). ASME B16.5 Class 300 flanges is 750 psig (51.71 barg) @ 100°F (38°C). The maximum pressure rating is lower at higher temperatures. Reference ASME/ANSI B16.5
- All pressures shown are based on an ambient temperature of 72°F (22°C)
- Not all minimum/maximum pressure and temperature combinations are available. Please contact ZOOK for more information
- Unless otherwise noted, stated MNFA and Kr values apply to the rupture disk only and does not include the addition of external vacuum supports or insulated units